ECE 1101L: Lab 2 – Series Resistors

Introduction: In our lab we arranged resistors of different values in series. We found current by dividing total voltage by total resistance. Power was found by multiplying voltage and current. Total resistance with all serial resistors meant we just added all the resistance values together. Deviation was found by Dev=(It-Im/It)*100. We were able to get our actual voltage source to 10.00V so we used 10V for our calculations and measurements. We used 1kΩ, 2.3kΩ, 3.9kΩ instead of 3.3kΩ since we could not find one, and 6.8kΩ resistors for this lab.

Prelab:

1. Find the values and tolerances of resistors color coded. There are any number places you can find the code online.
    a. Orange-orange-red-gold - 3.3kΩ ± 5%
    b. Yellow-violet-green-gold - 4.7MΩ ± 5%
    c. Brown-black-green-gold – 1MΩ ± 5%
    d. Green-blue-yellow - 560kΩ

2. Given a 6.8K 5% resistors, in what range can the actual value of the resistance be and still be within the 5% tolerance?

6.46kΩ - 7.14kΩ

3. Express the following resistance in terms of K or M – whichever is more appropriate:
    a. 2800Ω - 2.8kΩ
    b. 28,000 Ω - 28kΩ
    c. 280,000 Ω - 280kΩ
    d. 2,800,000 Ω - 2.8MΩ
    e. 28,000,000 Ω - 28MΩ

Experiment 1

Total Circuit I Theory (mA)	Total Power Theory (W)	Measured I Point A (mA)	Measured I Point B (mA)	Measured I Point C (mA)
1.420697	0.01420697	1.418968	1.417477	1.419385

	Resistance Theory (kΩ)	*Resistance Measured (kΩ)*	*Resistance Deviation (%)*	*Power (W)*	*Voltage measured (V)*	*Voltage Theory (V)*	*Voltage Deviation (%)*
R1	*1*	*0.98542*	*1.458*	*0.0019865*	*1.39828*	*1.3999832*	*0.1216613*
R2	*2.2*	*2.1915*	*0.3863636*	*0.0044132*	*3.1064*	*3.1134574*	*0.2266764*
R3	*3.9*	*3.8523*	*1.2230769*	*0.0077682*	*5.4679*	*5.4729510*	*0.0922912*
Total	*7.1*	*7.0388*		*0.0141680*	*9.97258*	*9.9863917*	

Explanation: First we used our resistance values so that we could get the total circuit resistance and then calculated the total circuit current and power. Then we actually measured the resistors and the total circuit resistance. With the power supply connected we recorded the current measurements at point a, b, and c. We applied ohms law to get the voltage drops across the resistors. After we measured voltages to get our deviations. Lastly, we did all our deviations and did our power calculations.

Experiment 2

Total Circuit I Theory (mA)	Total Power Theory (W)	Measured I Point A (mA)	Measured I Point B (mA)	Measured I Point C (mA)	Measured I Point D (mA)
0.727050646	0.00727050646	0.720271	0.724458	0.726164	0.725614

	Resistance Theory (kΩ)	*Resistance Measured (kΩ)*	*Resistance Deviation (%)*	*Power (W)*	*Voltage measured (V)*	*Voltage Theory (V)*	*Voltage Deviation (%)*
R1	*1*	*0.98542*	*1.458*	*0.0005160*	*0.70977*	*0.7164502*	*0.9324091*
R2	*2.2*	*2.1915*	*0.3863636*	*0.0011543*	*1.58765*	*1.5933314*	*0.3565793*

R3	*3.9*	*3.8523*	*1.2230769*	*0.0020338*	*2.7974*	*2.8008172*	*0.1220074*
R4	6.8	6.7201	1.175	0.0035452	4.8762	4.8858530	0.1975714
Vac					2.29742	2.30978	
Vb					0.70977	0.71645	
Total	13.9k	13.7542		0.0072494	9.97102	9.9964519	

Explanation: We measured all our resistors and then added them since they are serial to get total resistance. Then used voltage divider rule to get Vac and Vb. Then we measured the total resistance by placing the DMM probes to point A and ground. After that we connected our power supply and measured the voltage across the resistors. Then we did the deviation of voltage compared to the theory. Lastly, we calculated the power dissipation and measured our Vac and Vb.

Post Lab:

1. Determine the value of R4 in the circuit of Figure 2

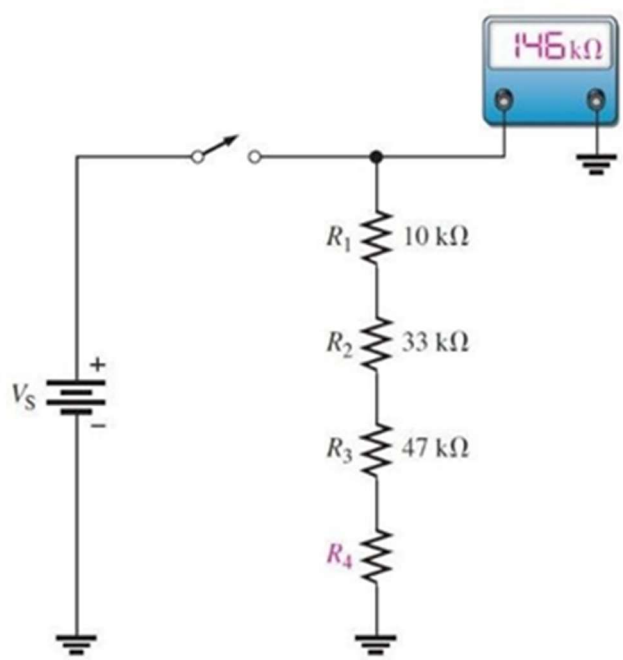

R4=R1+R2+R3-146kΩ=10+33+47-146

R4=56kΩ

2. By observing the meters in Figure 3, determine the types of failures in the circuits and which components have failed.

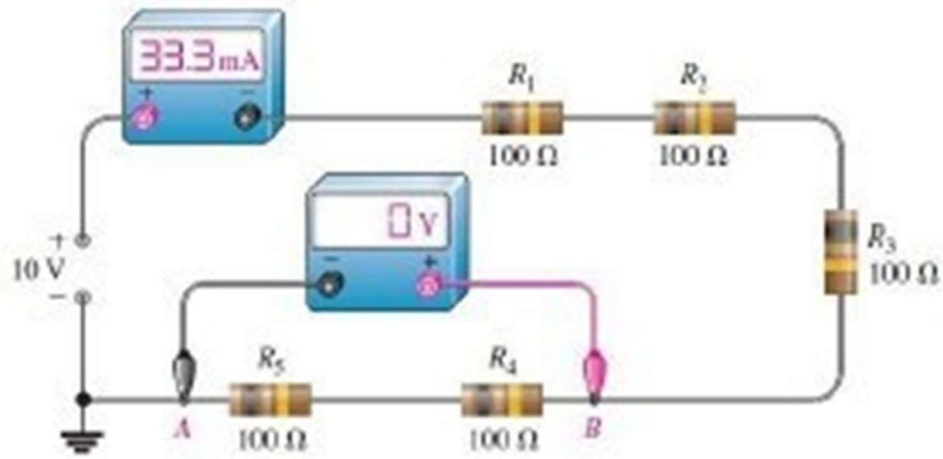

The failure that happens here is there is no voltage at R5 and R4, so those resistors are basically useless.

Conclusion: In conclusion, we applied serial resistor rule to get total resistance so that we would be able to find all our other data such as current and voltage. It was interesting to see how the voltage dropped across the different resistance values and how our theoretical values we got with series additition almost matched the measured data.